LOW PROFILE SPEC SHEET

3312-002
Gladiator Lid with
Smooth Black Base

3322-004 Diamond Plate Lid with
Smooth Aluminum Base

DIMENSIONS: 70" X 13.5" X 20"

Measured by Width x Height x Depth

ITEM CODE	LID FINISH	BASE FINISH
3312-001	Diamond Plate	Smooth Aluminum
3312-001-BK62	Black Diamond Plate	Smooth Black
3312-001-BK62S	Leopard	Smooth Black
3312-002	Gladiator	Smooth Black
3322-002	Diamond Plate	Diamond Plate
3322-002-BK62	Black Diamond Plate	Black Diamond Plate
3322-002-BK62S	Leopard	Leopard
3313-001-BK62	Gladiator	Gladiator
3330-001	Diamond Plate	Polished Aluminum
FITS ALL FULL-SIZED TRUCKS		

DIMENSIONS: 70" X 13.5" X 23"

Measured by Width x Height x Depth

ITEM CODE	LID FINISH	BASE FINISH
3312-004	Diamond Plate	Smooth Aluminum
3312-004-BK62	Black Diamond Plate	Smooth Black
3312-004-BK62S	Leopard	Smooth Black
3312-003	Gladiator	Smooth Black
3322-001	Diamond Plate	Diamond Plate
3322-001-BK62	Black Diamond Plate	Black Diamond Plate
3322-001-BK62S	Leopard	Leopard
3313-002	Gladiator	Gladiator
3330-003	Diamond Plate	Polished Aluminum
FITS ALL FULL-SIZED TRUCKS		

DIMENSIONS: 70" X 13.5" X 27"

Measured by Width x Height x Depth

ITEM CODE	LID FINISH	BASE FINISH
3312-005	Diamond Plate	Smooth Aluminum
3312-005-BK62	Black Diamond Plate	Smooth Black
3312-005-BK62S	Leopard	Smooth Black
3312-004	Gladiator	Smooth Black
3322-003	Diamond Plate	Diamond Plate
3322-003-BK62	Black Diamond Plate	Black Diamond Plate
3322-003-BK62S	Leopard	Leopard
3313-003-BK62	Gladiator	Gladiator
3330-005	Diamond Plate	Polished Aluminum
FITS ALL FULL-SIZED TRUCKS		

LOW PROFILE TOOL BOX

Measured by Width x Hieght x Depth
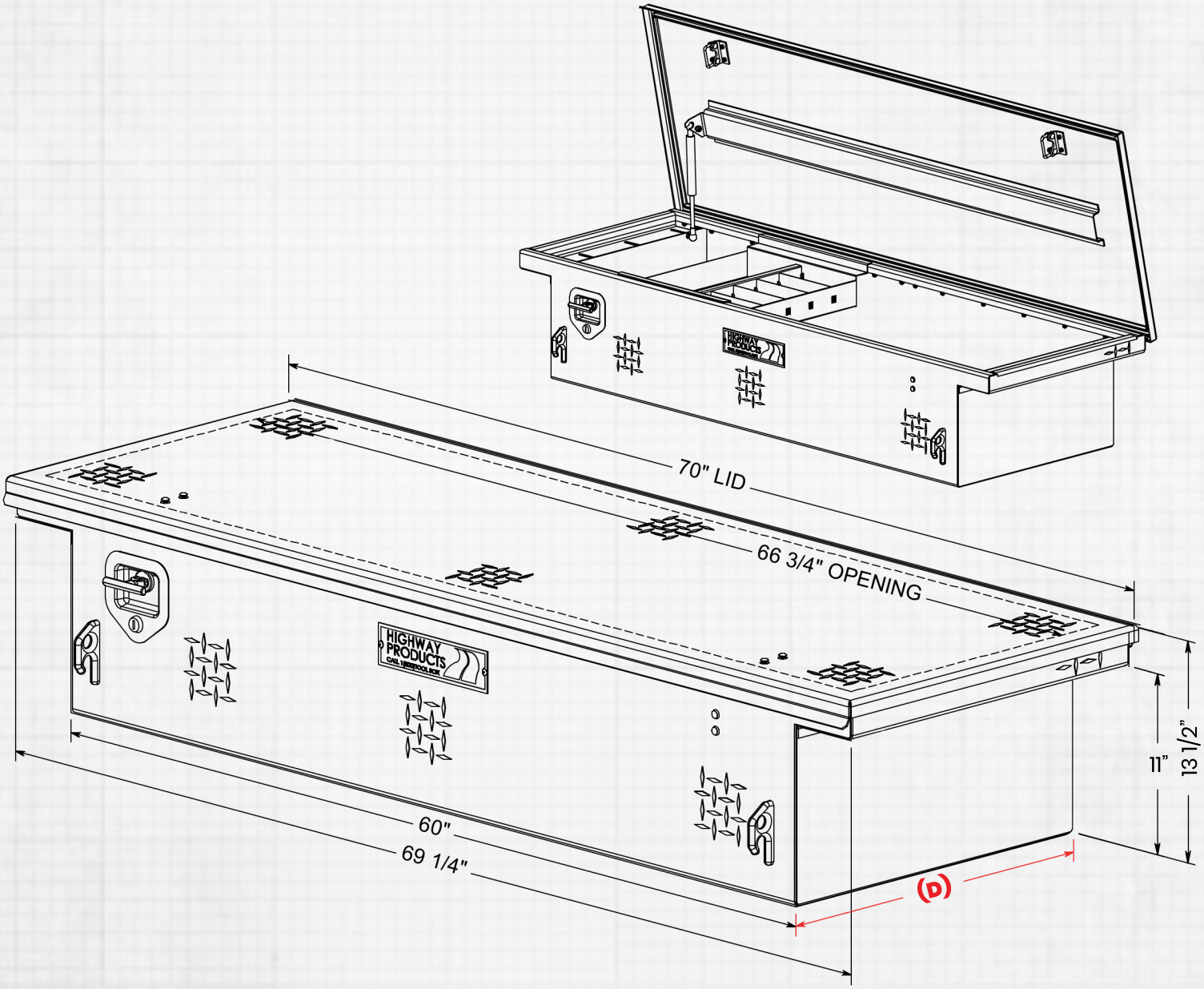
Choose between different Depths (D) & Finishes
See Product Spec Sheet for more information